980 YAGI ANTENNAS SERIES 746-960 MHz

980 Yagi Antennas Series

The 980 Yagi Antenna Series are available in 2, 3, 7, 12 element configurations. All our antennas can be completely customized to your particular applications. Our antennas can be black anodized, vertically or horizontally polarized.

- Each antenna has a rugged design to withstand harsh environmental conditions.
- The mounting hardware supplied will permit either vertical or horizontal polarization.
- All 980 Series Yagi antennas are fully welded.
- Heavy-duty versions are available. Please contact our Technical Support team for consultation.

983-70

Electrical Specifications	982-70	983-70	980-70	987-70
Frequency Range, MHz	900-930	746-960	746-960	746-960
Nominal Gain, dBd	3.5	6.5	10.0	12.0
Number of Elements	2	3	7	12
Bandwidth 1.5:1 VSWR, MHz (Ctr. Freq.%)	30	85	85	85
Polarization	Vert. or Horiz.	Vert. or Horiz.	Vert. or Horiz.	Vert. or Horiz.
Horizontal Beamwidth (Horizontal Pol.)	128º	99º	56º	41º
Vertical Beamwidth (Horizontal Pol.)	66º	60º	42º	38º
Front to Back, dB	9	16	20	20
Pattern	Directional	Directional	Directional	Directional
Power Rating, Watts	200	200	200	200
Nominal Impedance, Ohms	50	50	50	50
Standard Termination	Type N Male	Type N Male	Type N Male	Type N Male
Mechanical Specifications	**982-70**	**983-70**	**980-70**	**987-70**
Length, in (mm)	11 (280)	13 (330)	27 (686)	41 (1041)
Width (1/2 Wave Spacing), in (mm)	6.5 (165)	8 (203)	8 (203)	8 (203)
Weight, lbs. (kg)	1.7 (0.76)	1.8 (0.82)	2.5 (1.1)	3 (1.4)
Rated Wind Velocity, No Ice, mph (km/h)	160 (257)	160 (257)	150 (241)	140 (225)
Rated Wind Velocity, 0.5" (13mm) ice, mph (km/h)	120 (193)	120 (193)	110 (177)	100 (161)
Lateral Thrust @ 100 mph, wind, lbs.(kg)	2.6 (1.2)	2.8 (1.3)	7 (3.2)	11 (5.0)
Projected Area, ft² (m²)	0.10	0.13	0.26	0.41
Mounting Hardware Included	127-85 Clamp	127-85 Clamp	127-85 Clamp	127-85 Clamp

* See next page for ordering information (page 4) *

COMPROD Simplifying RF Solutions
www.comprodcom.com
Tel: US 1.877.825.2007 / CAN 1.800.603.1454
Email: sales@comprodcom.com
Fax: 1.800.554.1033

980 YAGI ANTENNAS SERIES 746-960 MHz

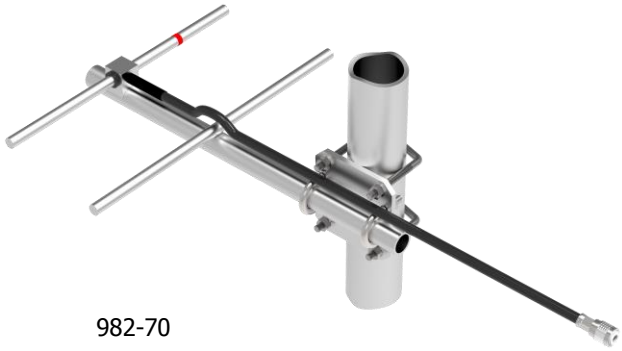

982-70

Horizontal Polarization

Horizontal Pattern

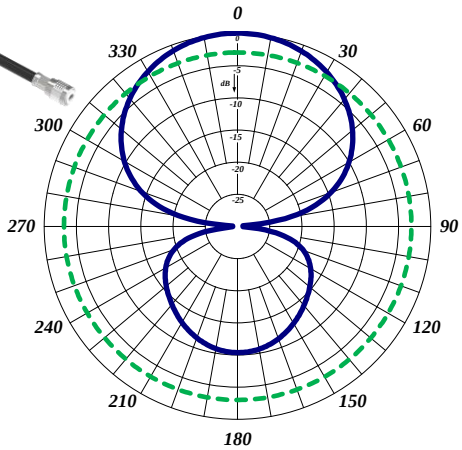

Vertical Pattern

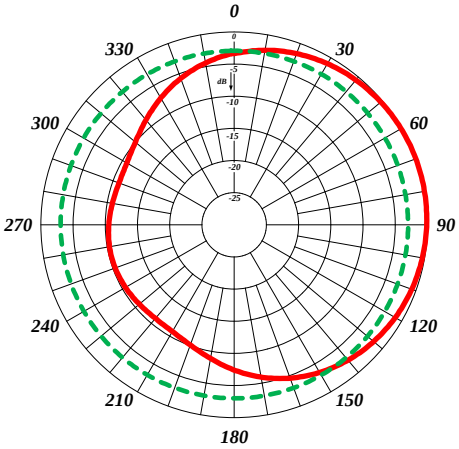

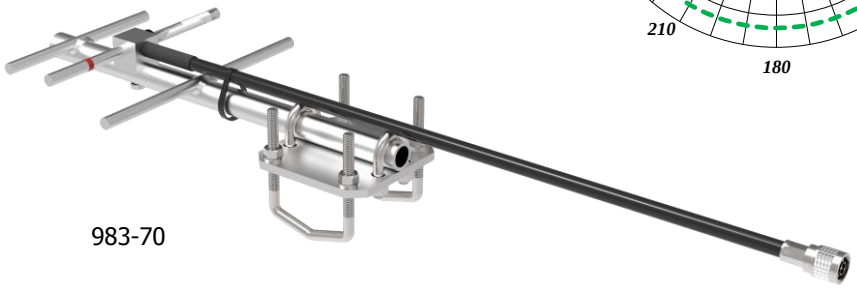

983-70

Horizontal Polarization

Horizontal Pattern

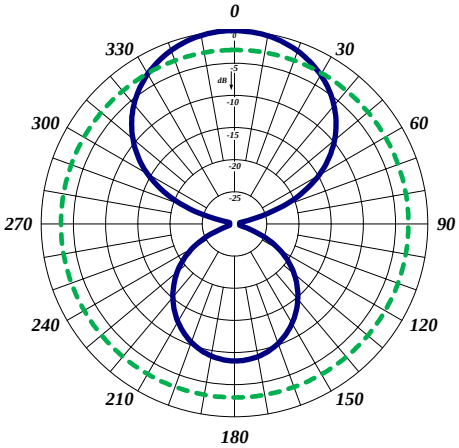

Vertical Pattern

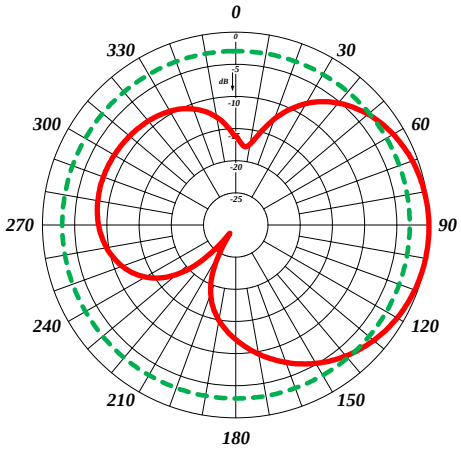

COMPROD Simplifying RF Solutions
www.comprodcom.com
Tel: US 1.877.825.2007 / CAN 1.800.603.1454
Email: sales@comprodcom.com
Fax: 1.800.554.1033

980 YAGI ANTENNAS SERIES 746-960 MHz

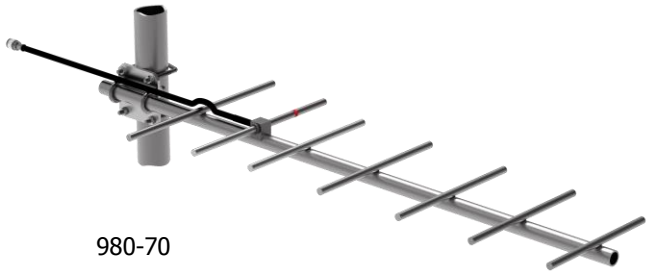

980-70

Horizontal Polarization

Horizontal Pattern

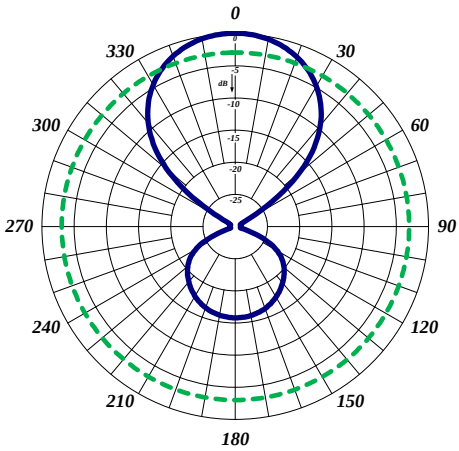

Vertical Pattern

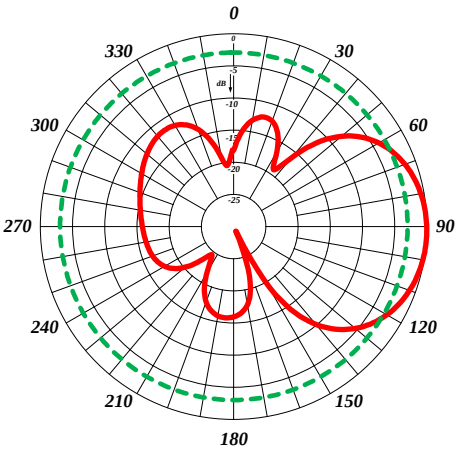

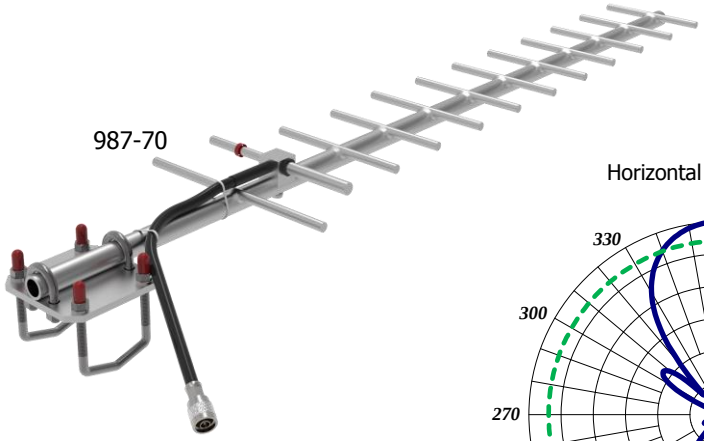

987-70

Horizontal Polarization

Horizontal Pattern

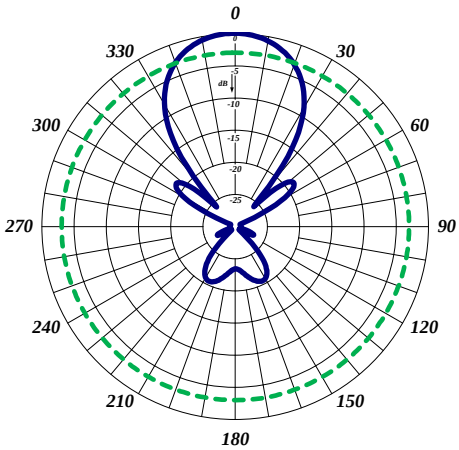

Vertical Pattern

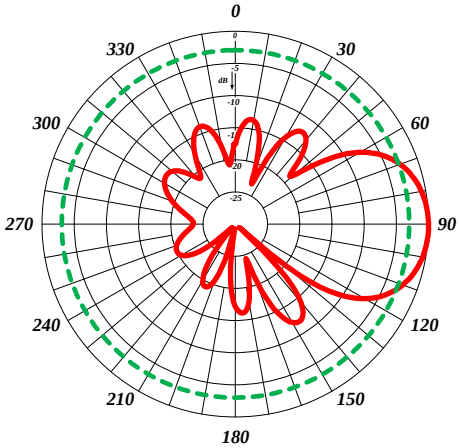

980 YAGI ANTENNAS SERIES 746-960 MHz

Order Information	746-806MHz	764-870 MHz	806-869MHz	824-896MHz	896-960MHz	Black Anodized	(2) Stacked
982-70	900-930 MHz offered					N/A	N/A
983-70	983-70*1	N/A	983-70*2	983-70*3	983-70*4	983-70B	N/A
980-70	980-70*1	980-70*5	980-70*2	980-70*3	980-70*4	980-70B	(2)980-70
987-70	987-70*1	N/A	987-70*2	987-70*3	987-70*4	987-70B	(2)987-70

Tel: US 1.877.825.2007 / CAN 1.800.603.1454
Email: sales@comprodcom.com
Fax: 1.800.554.1033