IN-BUILDING SYSTEMS

IN-BUILDING SYSTEMS

Comprod In-building antennas are offered for a variety of RF communication projects for environments that require internal propagation of RF for public safety needs. Our products have been deployed for mission critical projects including subway transit in-tunnel or underground projects, high-rise in-building systems, nuclear power plants, correctional facilities, shopping malls, parking garages, casinos and public sports arenas.

Our line of antenna system solutions incorporates single, dual, and tri-band frequency specifications. These antennas are offered in a wide range of endosures: radomes, low profile, 6200 Kydex fire-retardant material, ABS high-impact, and polycarbonate.

Comprod can complement antenna systems with other RF components from our portfolio to build out the network: splitters, couplers, taps, cables, connectors, signal boosters (Bi-Directional Amplifiers) required for complete RF needs for In-building public safety requirements.

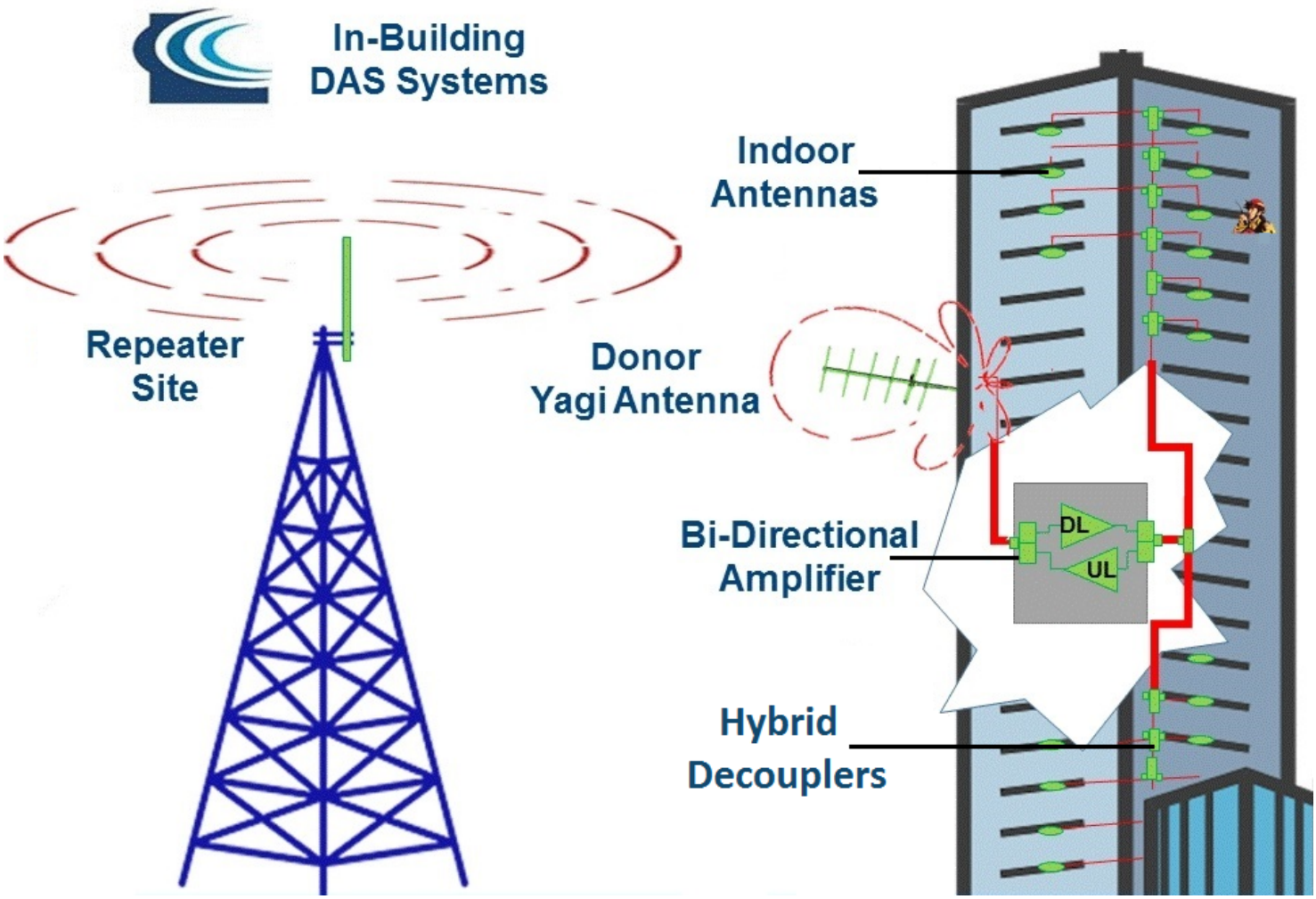

NOTE: For Donor Yagi Antennas please refer to Yagi Antenna section of our Catalog

Part Number	Frequency Range, MHz	Length, in (mm)	Diameter, in (mm)	Pattern	Power, Watts	Radome material	Color	Standard Connector
357-75	136-174	4 x 21 x 3		Omni	150	ABS/6200 Kydex	Grey/White	UHF/BNC
360-75	406-512	3.25 x 3 x 11		Omni	50	ABS/6200 Kydex	Grey/White	UHF/BNC
361-75	806-960	3.15 (80)	9.3 (236)	Omni	50	ABS/6200 Kydex	Grey/White	N Female
362-75	806-960	2.0 (51)	4.5 (114)	Omni	100	ABS/6200 Kydex	Grey/White	N Female
F3987	380-470	6.75 (171)	0.5 (12.75)	Omni	150	Aluminum	Black or white	NMO
F3953	406-512	7.0 (178.5)	0.625 (15.93)	Omni	50	Polycar-bonate	Black or white	N Male
F33005	806-960 / 1850-1990	2 (51)	4.5 (114)	Omni	50	6200 Kydex	White	N Female
F33048	740-960	2 (51)	4.5 (114)	Omni	50	6200 Kydex	White	N Female
F3749	VHF /UHF/ 806-960	9.78 (249)	7.0 (178.5)	Omni	50	6200 Kydex	White	N Female
F3741	VHF /UHF/ 806-960	11.25 (286.88)	0.65 (16.575)	Omni	50	Polycar-bonate	Black	N Male

Part Number	Frequency Range, MHz	Size, in (mm)	Color	Connectors	Max. Gain, dB	Noise Figure, dB	Max. Out-put Power, dBm	Input Voltage	Alarm Indicators
UBDA-138225	138-225 MHz	24H x 20W x 14D	Grey	N Female	+100	4 typical	DL: +29 UL: +29	AC: 115-220	Power Fail
UBDA-4551	380-512 MHz	24H x 24W x 12D	Grey	N Female	+70	4 typical	DL: +29 UL: +29	AC: 115-220	N/A
BDA 764806	DL: 764-776 UL: 794-806	10H x 16W x 8.5D	Grey/Red	N Female	+83.5	2.5 typical	DL: +31.5 UL: +31.5	AC: 115-220 DC: 24-27	AGC, S/D, Power Fail
BDA 806870	DL: 851-869 UL: 806-824	10H x 16W x 8.5D	Grey/Red	N Female	+83.5	2.5 typical	DL: +31.5 UL: +31.5	AC: 115-220 DC: 24-27	AGC, S/D, Power Fail
BDA 896941	DL: 935-941 UL: 896-901	10H x 16W x 8.5D	Grey/Red	N Female	+83.5	2.5 typical	DL: +31.5 UL: +31.5	AC: 115-220 DC: 24-27	AGC, S/D, Power Fail

SINGLE-BAND ANTENNAS

Comprod In-building antennas are designed to provide excellent coverage solutions in order for external Public Safety Radio Frequencies to propagate within buildings, tunnels or public use environments.

We offer a variety of antennas with Fire Retardant 6200 Kydex radomes. These materials are designed for In-building applications and inside public transport vehicles such as underground trains, vans, buses and trains. They meet the recommended fire safety practices of both the Federal Transit Administration (FTA) and the Federal Rail Administration (FRA) for smoke emission and flammability as tested under ASTM E-662 and ASTM E-162.

Our antennas have been installed worldwide and provide RF coverage inside nuclear power plants, correctional institutions, tunnels, high-rise buildings, subways, shopping malls, parking garages, power plants, high-security office networks and mine shafts.

Note add the material and connector to the part number when ordering:
ABS is for outdoor use and is grey in color
KYDEX is for indoor use and is white in color

362-75

Electrical Specifications	357-75	360-75	361-75	362-75
Frequency Range, MHz	148-174	406-512	806-960	806-960
Nominal Gain, dBd	Unity	Unity	Unity	Unity
Bandwidth 1.5:1 VSWR, MHz	3	20	140	66
Bandwidth: 2.0:1 VSWR, MHz	4	40	140	100
Polarization	Vertical	Vertical	Vertical	Vertical
Pattern	omnidirectional	omnidirectional	omnidirectional	omnidirectional
Power Rating, Watts	150	50	50	100
Nominal Impedance, Ohms	50	50	50	50
Radome	ABS / 6200 Kydex	ABS / 6200 Kydex	ABS / 6200 Kydex	ABS / 6200 Kydex
Color	Grey / White	Grey / White	Grey / White	Grey / White
Standard Termination	UHF / BNC / N	UHF / BNC / N	N Female	N Female

Mechanical Specifications	357-75	360-75	361-75	362-75
Width, in (mm)	4.0 (102)	3.0 (76)	3.15 (80)	2.0 (51)
Length, in (mm)	21.0 (533)	11.0 (279)	n/a	n/a
Height, in (mm)	3.0 (76)	3.25 (83)	n/a	n/a
Diameter, in (mm)	n/a	n/a	9.3 (236)	4.5 (114)
Weight, lbs (kg)	2.1 (0.945)	1.0 (0.45)	2.5 (1.15)	0.375 (0.169)
Min. Ground Plane Size, in (mm)	36 x 48 (914 x 1219)	20 x 16 (508 x 406)	14 x 14 (355 x 355)	10 x 10 (254 x 254)

SINGLE-BAND ANTENNAS

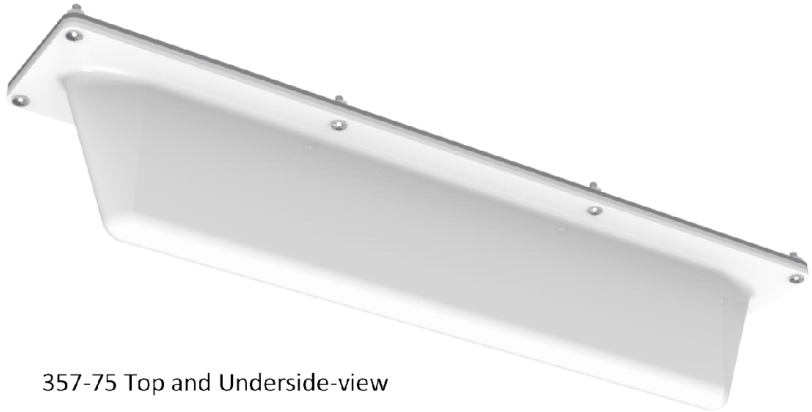

357-75 Top and Underside-view

361-75

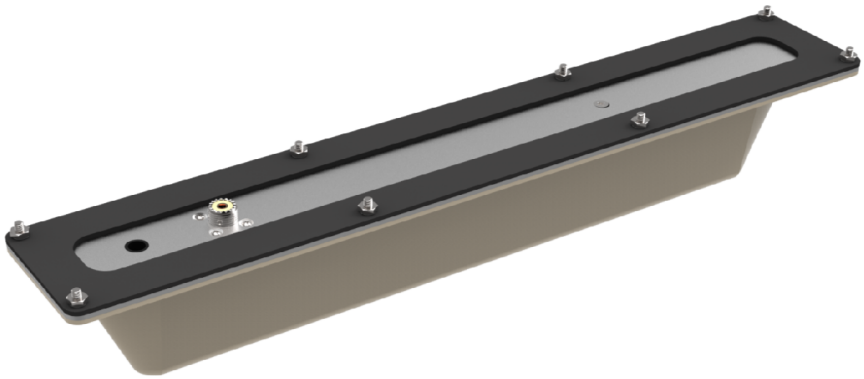

362-75 Top and Underside View

360-75

UHF IN-BUILDING ANTENNAS

Comprod In-building antennas are designed to provide excellent coverage solutions in order for external Public Safety Radio Frequencies to propagate within buildings, tunnels or public use environments.

Our antennas can cover single or multiple frequency bands.

We offer a wide variety of antennas with Fire Retardant 6200 Kydex radomes. These materials are designed for In-building applications and inside public transport vehicles such as underground trains, vans, buses and trains. They meet the recommended fire safety practices of both the Federal Transit Administration (FTA) and the Federal Rail Administration (FRA) for smoke emission and flammability as tested under ASTM E-662 and ASTM E-162.

Our antennas have been installed worldwide and provide RF coverage inside nuclear power plants, correctional institutions, tunnels, high-rise buildings, subways, shopping malls, parking garages, power plants, high-security office networks and mine shafts.

Note: Add "NGP" to part number to order without the ground plane.

F-3953

Electrical Specifications	F-3987	F-3953
Frequency Range, MHz	380-470	406-470 / 450-512
Nominal Gain, dBd	Unity	Unity
Bandwidth: 2.0:1 VSWR, MHz	90	64
Polarization	Vertical	Vertical
Pattern	omnidirectional	omnidirectional
Power Rating, Watts	150	50
Nominal Impedance, Ohms	50	50
Material	Aluminium painted	Aluminum painted
Color	Black or White	Black or White
Standard Termination	N Male	N Male

Mechanical Specifications	F-3987	F-3953
Max. Length, in (mm)	6.75 (171)	7.0 (178.5)
Diameter, in (mm)	0.5 (12.75)	0.625 (15.93)
Weight, lbs. (kg)	N/A	N/A
Min. Ground Plane Size, in (mm)	8 x 8 (203 x 203)	8 x 8 (203 x 203)
Mounting Information	Included	Included

MULTI-BAND ANTENNAS

Comprod In-building antennas are designed to provide excellent coverage solutions in order for external Public Safety Radio Frequencies to propagate within buildings, tunnels or public use environments.

Our antennas can cover single or multiple frequency bands.

We offer a wide variety of antennas with Fire Retardant 6200 Kydex radomes. These materials are designed for In-building applications and inside public transport vehicles such as underground trains, vans, buses and trains. They meet the recommended fire safety practices of both the Federal Transit Administration (FTA) and the Federal Rail Administration (FRA) for smoke emission and flammability as tested under ASTM E-662 and ASTM E-162.

The antennas are installed on ceilings to provide RF coverage inside nuclear power plants, correctional institutions, tunnels, high-rise buildings, subways, shopping malls, parking garages, power plants, high-security office networks and mine shafts.

F-33005

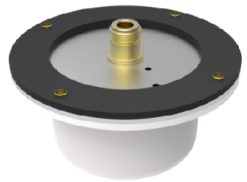

F-33048

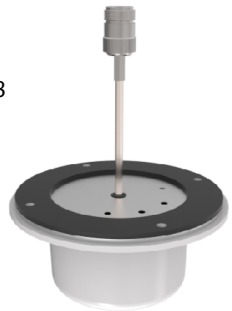

Electrical Specifications	F-33005	F-33048
Frequency Range, MHz	806-960 / 1850-1990	760-960
Nominal Gain, dBd	Unity	Unity
Bandwidth 1.5:1 VSWR, MHz		
138-174	n/a	n/a
406-512	n/a	n/a
760-960	n/a	200
806-960	72 (Specify Frequencies)	n/a
1800-1990	140	n/a
Polarization	Vertical	Vertical
Pattern	omnidirectional	omnidirectional
Power Rating, Watts	50	50
Nominal Impedance, Ohms	50	50
Radome	6200 Kydex	6200 Kydex
Standard Termination	N Female	32" Jumper - N Female

Mechanical Specifications	F-33005	F-33048
Max. Length, in (mm)	2 (51)	2 (51)
Diameter, in (mm)	4.5 (114)	4.5 (114)
Weight, lbs (kg)	0.375 (0.169)	0.375 (0.169)
Min. Ground Plane Size, in (mm)	8 x 8 (203 x 203)	8 x 8 (203 x 203)
Mounting hardware	Not Included	Not Included

TRI-BAND IN-BUILDING ANTENNAS

Comprod In-building antennas are designed to provide excellent coverage solutions in order for external Public Safety Radio Frequencies to propagate within buildings, tunnels or public use environments.

Our antennas can cover single or multiple frequency bands. We offer a wide variety of antennas with Fire Retardant 6200 Kydex radomes. These materials are designed for In-building applications and inside public transport vehicles such as underground trains, vans, buses and trains. They meet the recommended fire safety practices of both the Federal Transit Administration (FTA) and the Federal Rail Administration (FRA) for smoke emission and flammability as tested under ASTM E-662 and ASTM E -162.

The F-3741 has been designed for mounting on a concrete surface. This is a requirement for meeting full bandwidth specifications. Polycarbonate tubing is used for the radome on the F-3741. It's a flame resistant and self-extinguishing material. The F-3741 and F-3749 models are also available for the 700 MHz bands.

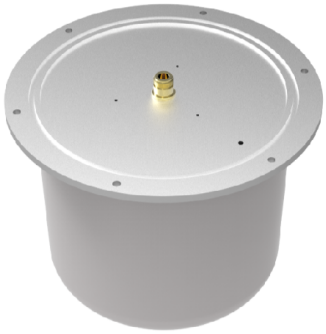

F-3749

Electrical Specifications	F-3741	F-3749	F-3749A
Frequency Range, MHz	VHF / UHF / 806-960	VHF / UHF / 806-960	VHF / UHF / 806-960
Nominal Gain, dBd	Unity	Unity	Unity
Bandwidth: 2.0:1 VSWR, MHz			
138-174	8	8	8
406-512	64	64	64
764-890	126	126	126
806-960	154	154	154
1800-1990	n/a	n/a	n/a
2400-3000	n/a	n/a	n/a
Polarization	Vertical	Vertical	Vertical
Pattern	Omnidirectional	Omnidirectional	Omnidirectional
Power Rating, Watts Total	50	50	50
Nominal Impedance, Ohms	50	50	50
Radome	Polycarbonate	6200 Kydex	6200 Kydex
Color	Black	White	White
Standard Termination	N Male	N Female	2 foot jumper to N Male

Mechanical Specifications	F-3741	F-3749	F-3749A
Length, inch (mm)	11.25 (286.88)	9.78 (249)	9.78 (249)
Diameter, inch (mm)	0.65 (16.575)	7.0 (178.5)	7.0 (178.5)
Weight, lbs (kg)	N/A	N/A	N/A
Min. Ground Plane Size, in (mm)	Included (Required)	14 x 14 (357 x 357)	14 x 14 (357 x 357)

TRI-BAND ANTENNAS

F-3749 A Top
and Underside View

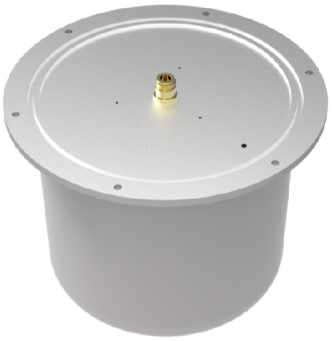

F-3749 Top and
Underside View

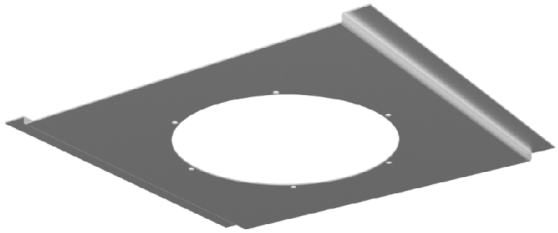

F-33034 Optional Mounting Bracket for F-3749

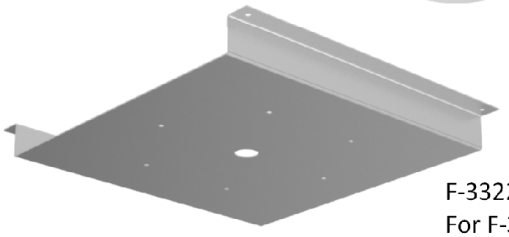

F-33220 Optional Mounting Bracket
For F-3749 and F– 3749 A Styles

Also available:
F-33135 Optional 2’ by 4’ Mounting Bracket
F-33203 Optional 2’ by 2’ Mounting Bracket
F-33159 Optional 12” by 26” Mounting Bracket

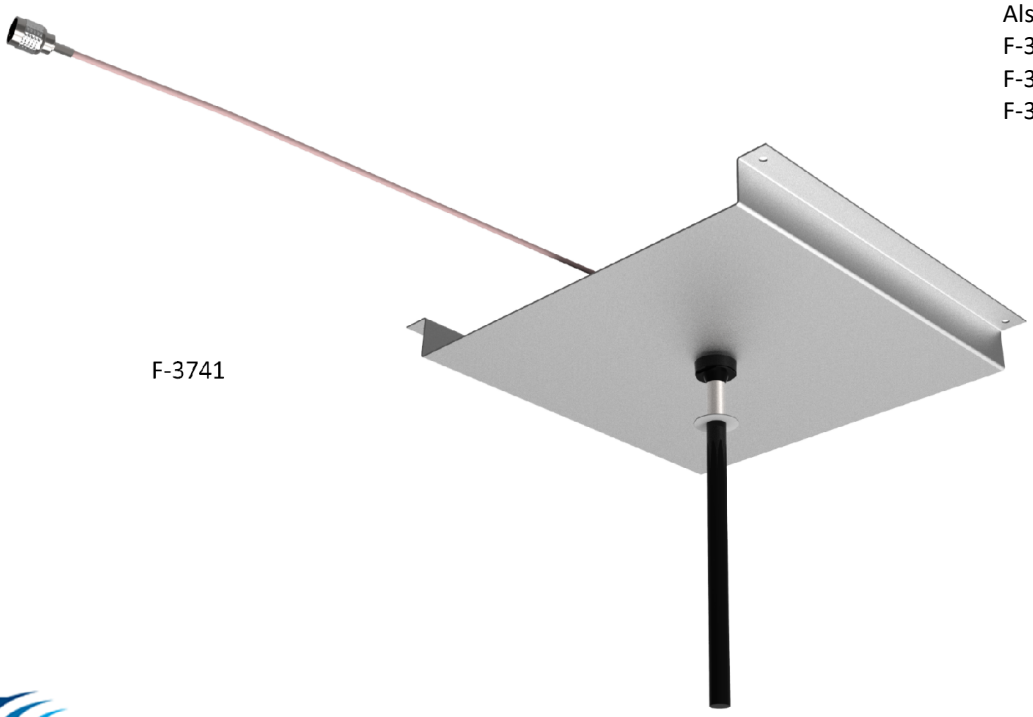

F-3741

VHF BI-DIRECTIONAL AMPLIFIER (BDA) 138-225 MHz

BDA-138225-SERIES

Comprod's BDA138225 is an unidirectional Class B signal booster. It covers both the 138-174 MHz and 216-225 MHz bands. The amplifier can be used with input / output filters as an Unidirectional Amplifier or it can be combined with input and output duplexers to create a Bi-Directional Amplifier.

Note: The BDA138225 must have adequate input and output filtering to prevent undesired interference. This is only sold as part of a complete BDA system.

Electrical Specifications	Canada	USA
Certification	IC: 7755A-UDA138225	FCC: WDM-BDA138225
Frequency Range, MHz	138-225	150-225
Automatic Level Control (ALC), dB	35	35
Amplifier Maximum Gain, dB	+ 100 Typical	+ 100 Typical
System Nominal Gain at –45 dBm input power	+ 75	+ 75
Input Manual Attenuator Range, dB	0 to 30 in 2 dB steps	0 to 30 in 2 dB steps
Output Level Manual Adjustment range, dB	0 to 15 in 1 dB steps	0 to 15 in 1 dB steps
3rd Order Output Intercept Point, dBm	+48 Typical	+48 Typical
Noise Figure, Typical (without filters), dB	4	4
Limited Output Composite Power, dBm	+31	+31
Nominal Impedance, Ohms	50	50
Input / Output Connectors	N Female	N Female
AC Power Source Input, Volts	100 to 260 50/60Hz	100 to 260 50/60Hz
Optional DC Power Source Voltages, Volts	+24 or +48	+24 or +48
Optional dry contact alarms	Power Failure	Power Failure

Mechanical Specifications (Typical)	
Dimensions, in H, W, D	24 x 20 x 13.5
Temperature Range, °F (°C)	-4 to 131 F (-20 to +55) C
Weight, lbs (Kg)	100 (45)

UHF BI-DIRECTIONAL AMPLIFIER (BDA) 380-512 MHz

UBDA-3845/4551-SERIES

Our BDA system is designed for high standards with government and industrial clients in mind. The solution can be customized for unique client requirements.

Reliable RF coverage for public safety and utility clients in 380-512 MHz offered for applications including hotel parking garages, underground mining facilities, shopping malls, hospitals, government buildings, subway stations and tunnels. Available in rack mount, NEMA stainless steel or painted steel NEMA enclosures. Compliant to Govt. standards: FCC WDM-UBDA 4551; IC 7755A-UBDA4551. This is only sold as part of a complete BDA system.

Electrical Specifications	
Frequency Range, MHz	380-512
Passbands	2 (4 passband version available)
Guard Band, MHz	2-3
Window Bandwidth, MHz (configured by channel filters)	2-3
Automatic Level Control (ALC), dB	Yes (30 dB)
Maximum Gain, dB	+ 70 dB Typical
Output Level / Input Attenuator Range, dB	0 to 15 in 1 dB steps / 0 to 30 in 2 dB steps
3rd Order Output Intercept Point, dBm	+48 Typical
Output 1 dB Compression Point, dBm	+38 Typical
Noise Figure, Typical (with filters), dB	5.5
Uplink Max Output (Composite), dBm	+29
Downlink Max Output (Composite), dBm	+29
Nominal Impedance, Ohms	50
VSWR	1.5:1
AC Power Input, Volts	117 to 260
Temperature Range, °F (°C)	-4 to 131 (-20 to +55)
Input / Output Connectors	N Female

Mechanical Specifications	
Enclosure	NEMA 4 Painted Steel
Dimensions, in H, W, D	24 x 16 x 11.5 (Large Enclosure) ; 14 x 8 x 7 (Attached Small Enclosure)
Weight, lbs (Kg) (Approximate)	100 (45)

BI-DIRECTIONAL AMPLIFIER (BDA) 764-941 MHz

BDA-40-SERIES

Designed and engineered to meet the fire protection codes (NFPA and IFC standards), Comprod's Bi-Directional Amplifier (BDA) features advanced Alarm, Monitoring & Control capabilities ensuring continuous availability of mission-critical services.

- Available in 700, 800 and 900 MHz Public Safety bands
- Ideal for indoor applications in commercial and government buildings, parking garages, mining facilities, subway stations and tunnels
- Rack mounted or in NEMA 4/4x waterproof, stainless steel enclosures
- Low noise figure, wide dynamic range
- Visual alarms and remote failure monitoring with Graphical User Interface

Electrical Specifications	BDA 764806	BDA 806870	BDA 896941
Frequency Range, MHz	DL: 764-776 UL: 794-806	DL: 851-869 UL: 806-824	DL: 935-941 UL: 896-901
Passband Ripple, dB	+/- 1.5	+/- 1.5	+/- 1.5
Automatic Gain Control (AGC), dB	30	30	30
Maximum Gain, dB	+83.5	+83.5	+83.5
Manual Gain Control (MGC), dB	0-31 in 1 dB Steps	0-31 in 1 dB Steps	0-31 in 1 dB Steps
Noise Figure, dB	2.5 Typical	2.5 Typical	2.5 Typical
Delay, Max., µs	1	1	1
Max. Output Power, dBm	DL: +31.5 UL: +31.5	DL: +31.5 UL: +31.5	DL: +31.5 UL: +31.5
VSWR	1.5:1	1.5:1	1.5:1
Input Voltage, Volts	AC: 115-220 DC: 24-27	AC: 115-220 DC: 24-27	AC: 115-220 DC: 24-27
Temperature Range, °C	-30 to +60	-30 to +60	-30 to +60
Humidity, %	95	95	95
Connectors	N Female	N Female	N Female
LNA bypass Function Implementation, dBm	-20 @ Input Power	-20 @ Input Power	-20 @ Input Power
Alarms	AGC, S/D, Power	AGC, S/D, Power	AGC, S/D, Power

Mechanical Specifications	BDA 764806	BDA 806870	BDA 896941
Enclosure	NEMA 4 Painted Steel	NEMA 4 Painted Steel	NEMA 4 Painted Steel
Dimensions, in. H, W, D	17.5 x 11 x 9	17.5 x 11 x 9	17.5 x 11 x 9
Weight, lbs	33.5	33.5	33.5

BI-DIRECTIONAL AMPLIFIER (BDA) 764-941 MHz

Monitoring & Control	Built-in via RS-232 Connector (USB Optional)	Built-in via RS-232 Connector (USB Optional)	Built-in via RS-232 Connector (USB Optional)
Monitor	**BDA 764806**	**BDA 806870**	**BDA 896941**
	- TX/RX System Gain - TX/RX Attenuation - TX Input Power - TX/RX Output Power - DC Voltage/Current - System Temperature	- TX/RX System Gain - TX/RX Attenuation - TX Input Power - TX/RX Output Power - DC Voltage/Current - System Temperature	- TX/RX System Gain - TX/RX Attenuation - TX Input Power - TX/RX Output Power - DC Voltage/Current - System Temperature
Alarm	**BDA 764806**	**BDA 806870**	**BDA 896941**
	- TX Input Over Power - TX/RX Output Over Power - AGC Range Alarm - TX/RX Shutdown - PSU Alarm - Over Temperature	- TX Input Over Power - TX/RX Output Over Power - AGC Range Alarm - TX/RX Shutdown - PSU Alarm - Over Temperature	- TX Input Over Power - TX/RX Output Over Power - AGC Range Alarm - TX/RX Shutdown - PSU Alarm - Over Temperature
Control	**BDA 764806**	**BDA 806870**	**BDA 896941**
	- HPA On/Off - Gain - AGC On/Off - Shutdown On/Off - MCU Reset - Alarm Limit	- HPA On/Off - Gain - AGC On/Off - Shutdown On/Off - MCU Reset - Alarm Limit	- HPA On/Off - Gain - AGC On/Off - Shutdown On/Off - MCU Reset - Alarm Limit

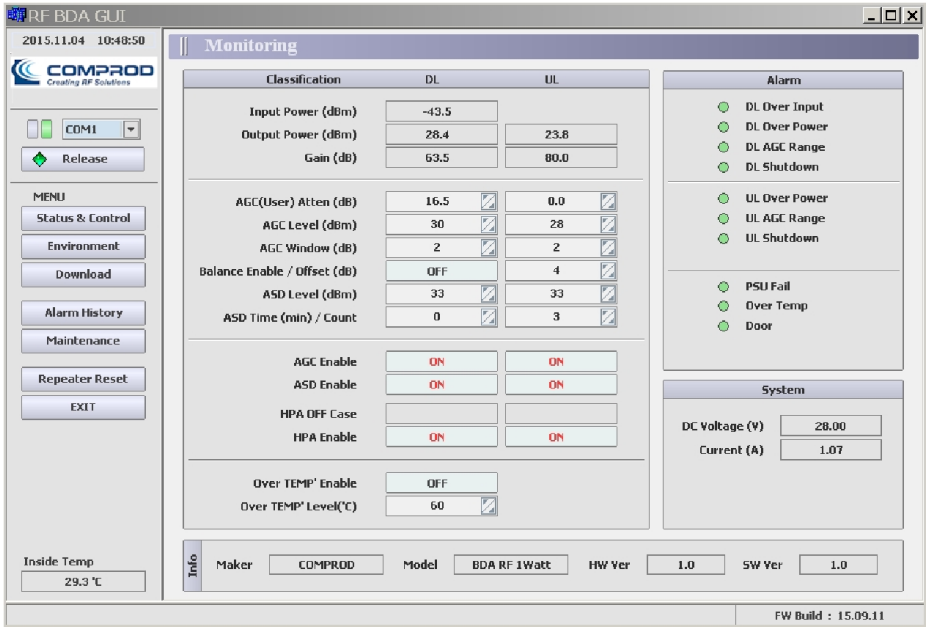

Visual Alarms and Remote Failure Monitoring with Graphical User Interface

HYBRID DIRECTIONAL COUPLERS 138-960MHz

49-FF-YY-XX Series

Comprod Communications Ltd. offers a full line of Hybrid Directional Couplers. The full range of decoupling values allows balanced power division and distribution. These couplers are bidirectional and are well suited for two-way communications systems. A full line of Tri-Band models is available for distribution of VHF, UHF and 800 MHz via a single transmission line. Standard finish is gold alodine.

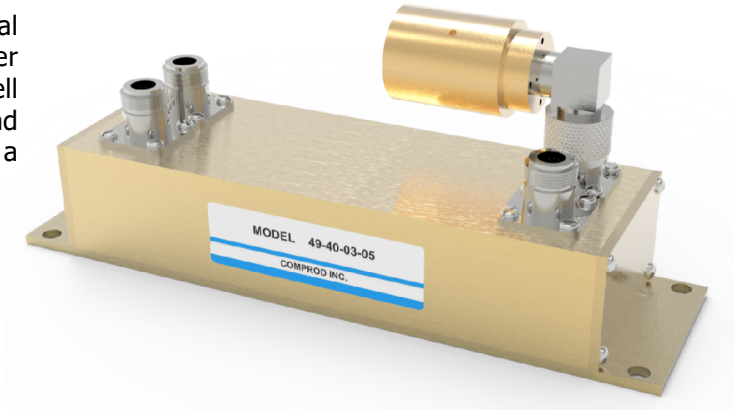

- Low Insertion Loss
- High Isolation between ports
- Excellent VSWR
- Tri-Band and other models are available and customizable. Please contact a Comprod Inc. Technical support technician for consultation.

Model With No Load	Model With 5 Watt Load	Model With 25 Watt Load	Frequency Range	Decoupling (dB)	Thruline Loss (dB)	Power Split Ratio (%)
49-13-03-00	49-13-03-05	49-13-03-25	138-174MHz	-3, ±0.7	-3.0, ±0.3	50 / 50
49-13-48-00	49-13-48-05	49-13-48-25	138-174MHz	-4.8, ±0.7	-4.8, ±0.3	67 / 33
49-13-06-00	49-13-06-05	49-13-06-25	138-174MHz	-6.0, ±1.0	-1.2, ±0.2	75 / 25
49-13-07-00	49-13-07-05	49-13-07-25	138-174MHz	-7.0, ±1.0	-1.0, ±0.2	80 / 20
49-13-10-00	49-13-10-05	49-13-10-25	138-174MHz	-10.0, ±1.0	-0.5, ±0.2	90 / 10
49-13-20-00	49-13-20-05	49-13-20-25	138-174MHz	-20.0, ±1.0	-0.3 max.	99 / 1
49-38-03-00	49-38-03-05	49-38-03-25	380-512MHz	-3, ±0.7	-3.0, ±0.3	50 / 50
49-38-48-00	49-38-48-05	49-38-48-25	380-512MHz	-4.8, ±0.7	-4.8, ±0.3	67 / 33
49-38-06-00	49-38-06-05	49-38-06-25	380-512MHz	-6.0, ±1.0	-1.2, ±0.2	75 / 25
49-38-07-00	49-38-07-05	49-38-07-25	380-512MHz	-7.0, ±1.0	-1.0, ±0.2	80 / 20
49-38-10-00	49-38-10-05	49-38-10-25	380-512MHz	-10.0, ±1.0	-0.5, ±0.2	90 / 10
49-38-15-00	49-38-15-05	49-38-15-25	380-512MHz	-15.0	-0.2 max.	97 / 3
49-38-20-00	49-38-20-05	49-38-20-25	380-512MHz	-20.0	-0.2 max.	99 / 1
49-38-30-00	49-38-30-05	49-38-30-25	380-512MHz	-30.0	-0.2 max.	99.9 / 0.1
49-74-03-00	49-38-03-05	49-38-03-25	746-960MHz	-3, ±0.7	-3.0, ±0.3	50 / 50
49-74-48-00	49-38-48-05	49-38-48-25	746-960MHz	-4.8, ±0.7	-4.8, ±0.3	67 / 33
49-74-06-00	49-38-06-05	49-38-06-25	746-960MHz	-6.0, ±1.0	-1.2, ±0.2	75 / 25
49-74-07-00	49-38-07-05	49-38-07-25	746-960MHz	-7.0, ±1.0	-1.0, ±0.2	80 / 20
49-74-10-00	49-38-10-05	49-38-10-25	746-960MHz	-10.0, ±1.0	-0.5, ±0.2	90 / 10
49-74-15-00	49-38-15-05	49-38-15-25	746-960MHz	-15.0	-0.2 max.	97 / 3
49-74-20-00	49-38-20-05	49-38-20-25	746-960MHz	-20.0	-0.2 max.	99 / 1
49-74-30-00	49-38-30-05	49-38-30-25	746-960MHz	-30.0	-0.2 max.	99.9 / 0.1